Cristina

CLASSIC COLLECTION

For Who Insist on The Best

Cristina | Classic Collection

Cristina offers an unsually varied selection of bathtubs to fit every need . . . suit every preference . . . meet every requirement.

Cristina "Classic Bathroom" is free standing, timeless beautiful in the room-an object of design. When you slide into a Classic roll-top bath you slightly recline back in time, to an era when baths could take hours, and usually did.

These baths convey you back to the future, NO HURRY! ONLY PEACE AND WARM. Most of all Classic Bathroom are manufactured from CRISOL . . . the latest hygienic solid surface which goes right the way through the material to ensure the color of both sides is integrately same. This means your bath maintains water temparature longer and is far more velvety to the touch than a traditional cast-iron roll-tub bath and press steel.

PRESTIGE

This graceful Neo Style Roman tub stands on the inspired dish base creates it distinctive while effeciently conceals its piping. Both ends are sloped to permit each users the same degree of comfort. Whether you take a bath alone or with another person the PRESTIGE is a bath to feel good in.

Stand

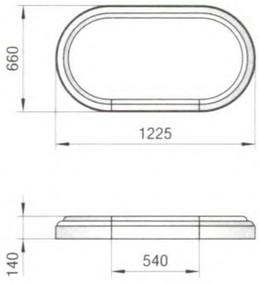

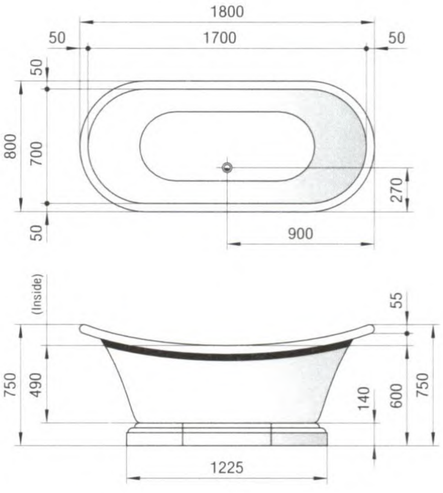

PRESTIGE

CT-PR 180080

SIZE : 1800 x 800 x 490 mm.

High over all 750 mm.

REGEND

The bathroom has always been a private place. But lately it's become a private paradise.

A place to escape. A place to pamper yourself . . . REGEND signifies the art of Roman bathing. Most excellent . . . most beautiful.

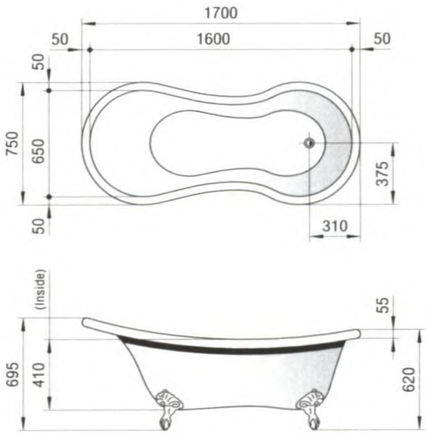

REGEND

CT-RE 170075

SIZE : 1700 x 750 x 410 mm.

High over all 695 mm.

SENZA

Design in a more traditional fashion, the classic curve lines of the SENZA provides both aesthetic and functional pleasure.

This model offers 2 graciously sloped ends and a center drain to permit bather comfortably at each end.

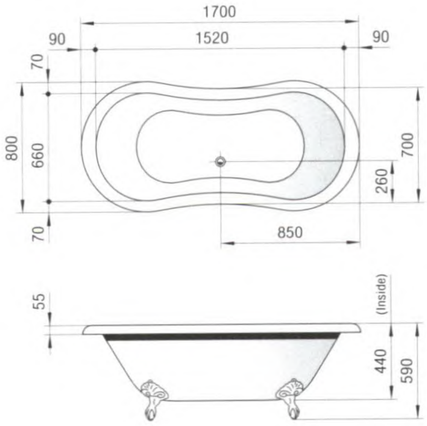

SENZA

CT-SE 170080

SIZE : 1700 x 800 x 440 mm.

High over all 590 mm.

EXCEL

Appreciated for its elegant, soft lines of this double-ended roll-top bath, the EXCEL inspires the design of ancient in Roman times. Soak your troubles away in this stylish bath and then you'll feel great.

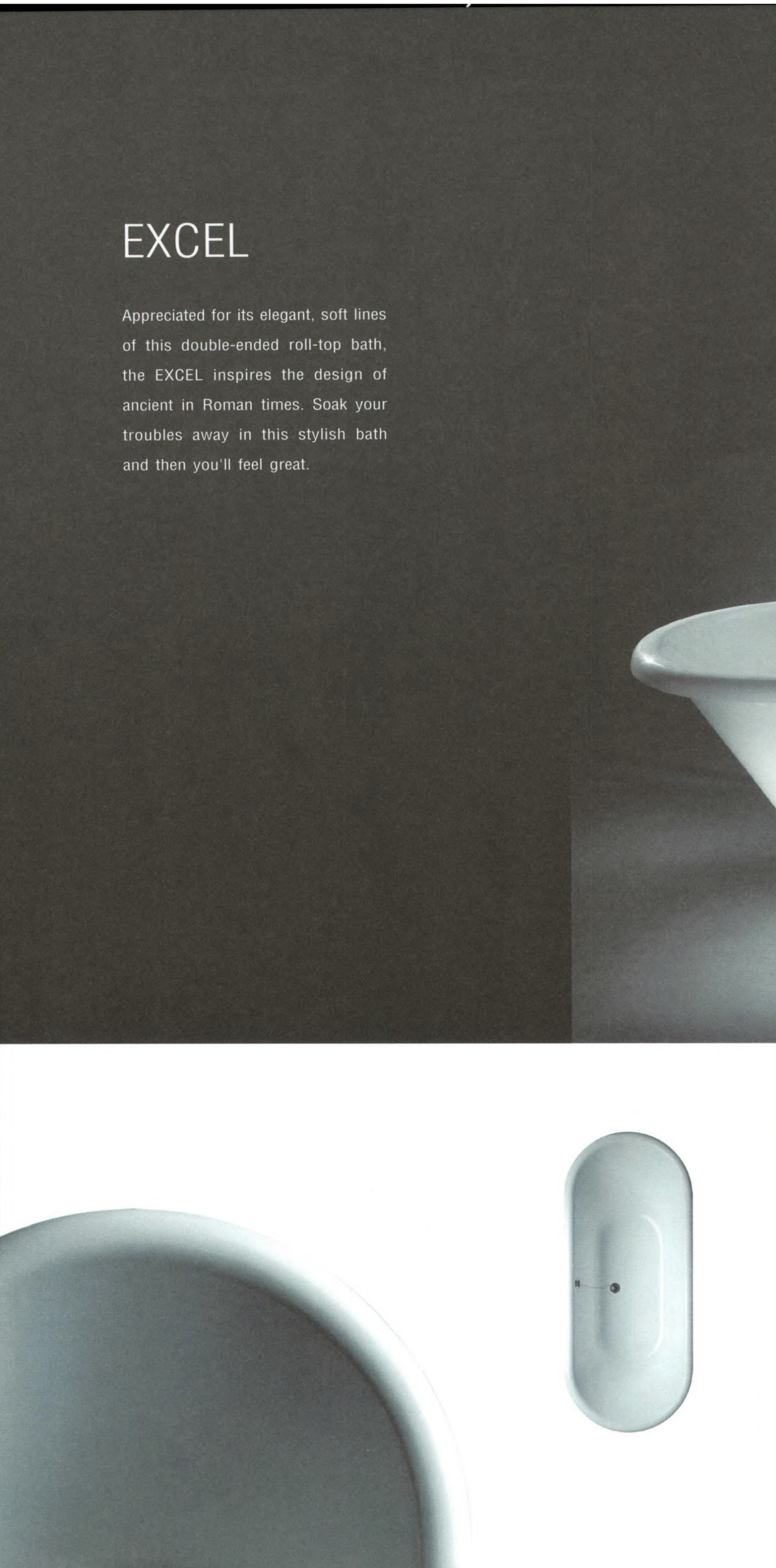

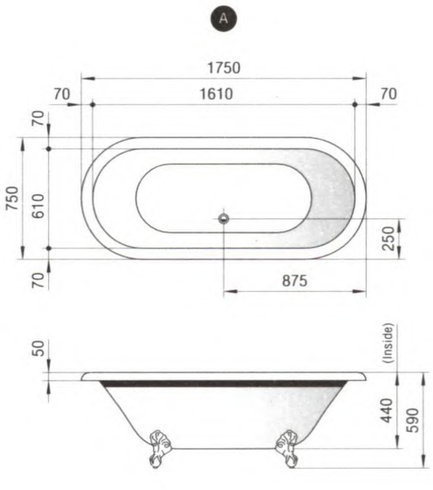

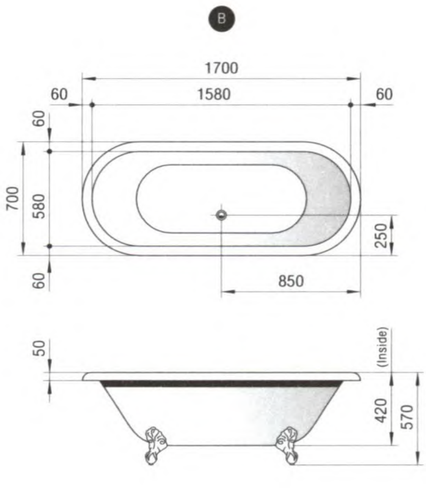

EXCEL-A

CT-EX-A 175075

SIZE : 1750 x 750 x 440 mm.

High over all 590 mm.

EXCEL-B

CT-EX-B 170070

SIZE : 1700 x 700 x 420 mm.

High over all 570 mm.

KLASSE

A truely classic with its ergonic reclining back-rest attracts the bath, perhaps sipping a favorite drink in this laid-back, single-ended roll-top bath . . . a hidden sanctuary in which to escape today's hectic and fast-paced life.

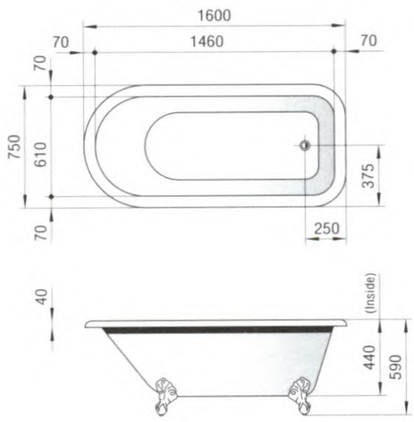

KLASSE

CT-KL 160075

SIZE : 1600 x 750 x 440 mm.

High over all 590 mm.

AN-BR • Bronze

AN-WH • White

Antico Ball & Clawfeet

AN-BR • Bronze
AN-BS • Brass
AN-CR • Chrome
AN-WH • White

. . . . . .

TI-BS • Brass

TI-CR • Chrome

Ticino Ball & Clawfeet

TI-BR • Bronze
TI-BS • Brass
TI-CR • Chrome
TI-WH • White

. . . . . .

Ball & Clawfeet

Either kind of ball & clawfeet is best feet suitable for any kind of

Classic Collection

The Characteristics of Classic Collection

Classic Collection made from CRISOL the latest hygienic solid surface innovation made from pure mineral powder mixed with acrylic. Such kind of mixture goes right the way through the material can be repaired and repolished to a factory finish.

- Durable yet easy to maintain
- Hard but not brittle
- Hard yet machinable
- Flexible but not flimsy
- Chemical resistant yet attractive
- Tough yet attractive
- Wear resistant yet machinable

Cristina Sanitary (Thailand) Co., Ltd.

1323-1325 ถ.สุทธิสารวินิจฉัย แขวงดินแดง เขตดินแดง กรุงเทพฯ 10400
1323-1325 Sutthisanwinichai Road, Dindeang, Bangkok 10400 Thailand.
Tel : (662) 693-8866 Fax : (662) 693-8877
http://www.cristina.co.th